TIPA Korea Technology and Information Promotion Agency for SMEs

(max 10 pages)

Technology Proposal for 2026 TIPA* International Joint R&D Program

(TIPA: Korea Technology and Information Promotion Agency for SMEs)

The objective of this Technology Proposal is to introduce the institute's proprietary technologies and present potential collaborative areas for Korean SMEs, facilitating joint research and development projects under the 2026 TIPA International Joint R&D Program. This Technology Proposal will be publicly disclosed in conjunction with the official announcement of the 2026 TIPA International Joint R&D Program.

1. Technology Proposer Information

Proposer	Name	Ish Kumar Jain	Email	jaini@rpi.edu
Institute Name	Rensselaer Polytechnic Institute			
Address	Jonsson Engineering Center, 6th Floor, 110 8th Street, Troy, Ny 12180, USA			

2. Technology Overview

Title of Proposed Technology	AeroSense: Bi-Static ISAC for Drone Detection and Tracking using MIMO-RIC Enabled Open-RAN and Private 5G Networks			
Korea's 12 National Strategic Technology Fields	Semiconductor/Display ( ), Secondary Battery ( ), Advanced Mobility ( ), Next-gen Nuclear Power ( ), Advanced Bio ( ), Aerospace/Marine ( ), Hydrogen ( ), Cybersecurity ( ), AI ( ), Next-gen Communication (√), Advanced Robotics & Manufacturing ( ), Quantum ( )			
Industrial Technology Classification 1)	**Technology Field 1** (Large Category)		**Technology Field 2** (Large Category)	
	Information & Communication		Information & Communication	
	Medium Category	Small Category	Medium Category	Small Category
	Mobile Communication	Mobile Communication Services	ICT Modules and Components	Mobile Communication Modules and Components
Concept of Proposed Technology	**AeroSense** is a bi-static and multi-static **Integrated Sensing and Communication (ISAC)** system that turns existing 5G base stations into a distributed RF sensing fabric for airspace security. Instead of relying on custom radar waveforms, AeroSense extracts sensing observables from standard 5G uplink reference signals, including SRS and DMRS, and uses them opportunistically within uplink slots. This makes the approach deployment-friendly for **private 5G integrators and O-RAN vendors.** AeroSense is built on our **MIMO-RIC platform [2,4]** as shown in Figure 1, which provides low-latency, wideband MIMO telemetry from the gNB PHY. MIMO-RIC aggregates per-antenna channel state across subcarriers and time into a compact 3D channel cube and streams only the freshest state to bound latency and memory, enabling near-real-time closed-loop control. Our initial demonstration uses srsRAN, and the interfaces are designed to be portable to other O-RAN compliant or proprietary RAN stacks at higher TRL.			

<table>
<tr>
<td></td>
<td>
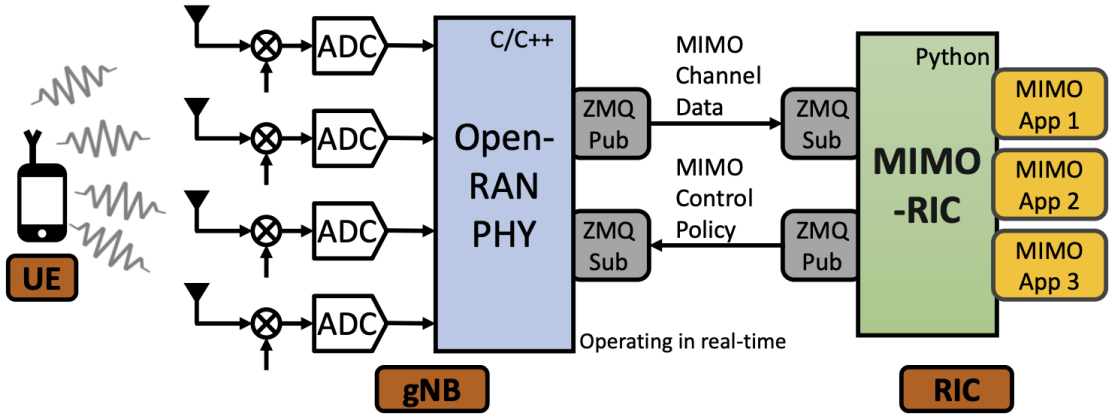

Figure 1: MIMO-RIC Platform operating in real-time with srsRAN software.

Key technical capabilities include:
1) **5G-compliant bi-static sensing:** extracting delay, Doppler, and angle-of-arrival signatures from SRS and DMRS across multiple gNB receivers.
2) **Drone detection and tracking:** implementing high-resolution angle estimation (2D MUSIC) [3,5,7,8] and multi-domain tracking (MD-Track) [6] that fuses delay, Doppler, and angle features across links.
3) **Sensing-communication co-design:** scheduling and beamforming policies that balance sensing observability and user QoS, including selecting which UEs and which pilot resources most improve drone observability.
4) **Drone classification:** a lightweight ML model that differentiates drones from non-drone objects using trajectory patterns and intrinsic RF features estimated by AeroSense.

The outcome is an industry-ready software stack, APIs, and reference xApps that Korean O-RAN vendors and private 5G integrators can integrate into product roadmaps, supported by curated datasets and open-source releases as appropriate.
</td>
</tr>
<tr>
<td>**Rationale for Joint R&D Project**</td>
<td>
Unauthorized drones are a growing security and safety risk for critical facilities, including manufacturing plants, warehouses, energy sites, ports, and campuses. Today's solutions typically require dedicated radars or dense camera deployments, which increases cost, site complexity, and maintenance burden. AeroSense enables airspace monitoring using existing private 5G infrastructure, creating a compelling commercial feature for O-RAN vendors and system integrators.

Joint R&D is needed because the research institute will deliver the core **5G-compliant sensing**, tracking, and co-design algorithms, along with rigorous over-the-air evaluation on srsRAN, while the Korean SME partner will harden the software, integrate AeroSense into an O-RAN or private 5G product stack, and access real customer environments for pilot trials. Together we will deliver measurable value, improved site security coverage without new sensors, and a clear path to commercialization through licensing, joint IP, and packaged xApp offerings.
</td>
</tr>
<tr>
<td>**Key Words**</td>
<td>
1. AeroSense – Aerial Sensing with 5G
2. Bi-static / multi-static ISAC
3. Drone detection and tracking
4. 5G uplink sensing (SRS, DMRS)
5. MIMO-RIC telemetry and control
</td>
</tr>
</table>

3. Research and Development Objectives & Plan

Technology Readiness Level (TRL)[2]	Start of the Project	Level (2)	End of the Project	Level (4)
R&D Objectives	• Create a reusable, low-latency Open-RAN MIMO telemetry and control framework that streams wideband channel estimates (antennas x subcarriers x time) and PHY KPIs to a near-real-time controller and supports safe actuation (beamforming and nulling updates). • Develop and validate two partner-ready xApp suites, a security suite for interference and jammer resilience, and an ISAC suite for localization and tracking, using the same telemetry pipeline. • Deliver integration-ready artifacts for Korean SMEs, including documented APIs, containerized reference implementations, a 4-antenna wideband testbed, synchronized datasets with labels, and validation reports suitable for product planning. • Demonstrate commercial relevance through two pilot scenarios, private network reliability under interference, and in-network sensing for industrial monitoring, with metrics linked to customer value (uptime, throughput, safety coverage, reduced sensor cost).			
R&D Target Specifications	**Target specifications for TRL 2 → TRL 4 prototype validation** Telemetry and control performance • Stream wideband DMRS-based channel tensors for up to 4 Rx antennas and up to 100 MHz bandwidth, with configurable decimation and aggregation. • Stream only the freshest state (bounded buffers, conflate mode) to support continuous operation even when controller runs slower than the PHY. • Added processing latency from telemetry extraction and serialization less than 0.5 ms per slot at the gNB in the reference setting, and end-to-end controller reaction within 10-50 ms for near-real-time xApps. • Support bi-directional control so the controller can send per-subcarrier null-steering or beamforming coefficients that are applied in the gNB equalizer path. Security xApps targets • Jammer/interference detection within 1-2 s using KPI trends (SINR, BLER, throughput) and channel statistics. • Wideband per-subcarrier beam nulling providing at least 5-10 dB effective interference suppression and at least 2x throughput recovery compared to no mitigation in representative scenarios. ISAC xApps targets • Angle of arrival estimation error below 3 degrees for static users in lab conditions, and robust tracking under moderate mobility. • Indoor localization error below 1-2 m for tagged assets or devices in a pilot area using multi-antenna features. • Release with synchronized channel tensors, ground-truth labels, and baselines for reproducible benchmarking. Partner integration targets • APIs and documentation that allow an SME to integrate at least one security xApp and one sensing xApp into their RIC stack and demonstrate on their preferred RU/DU platform in a pilot setting.			

R&D Plan

Project duration and structure

- **Phase 1, 6 months (July 1 to December 31, 2026)**: pre-study and evaluation, requirements and integration design, sub-6 prototype on srsRAN, initial drone experiments at RPI, dataset bootstrapping, market and IP plan, Phase 2 pilot-ready workplan.
- **Phase 2, 2.5 years (January 1, 2027 to June 30, 2029)**: main R&D, sub-6 bi-static/multi-static ISAC algorithms, real-time xApps, validation at RPI drone facility and representative sites, partner integration and commercialization support.

Phase 1, deliverables (pre-study and evaluation)

A. Requirements and AeroSense architecture for sub-6 bi-static ISAC (Month 1-2)

Objective: Lock a deployable sub-6 scope and partner-ready interfaces on top of the existing **MIMO-RIC** platform as shown in Figure 2.

- Select primary partner profile, **O-RAN software vendor and private 5G integrator**, and define one reference deployment, for example srsRAN gNBs, 1-4 UEs, sub-6 carrier, TDD.
- Define 5G-compliant sensing observables from **uplink DMRS and SRS** and specify sensing opportunity windows that preserve service.
- Specify multi-static requirements, **time alignment, (Center Frequency Offset) CFO handling, calibration workflow**, and confidence outputs.
- Produce **AeroSense Telemetry and Control Specification**, data formats, timestamps, buffering, and MIMO-RIC control hooks.

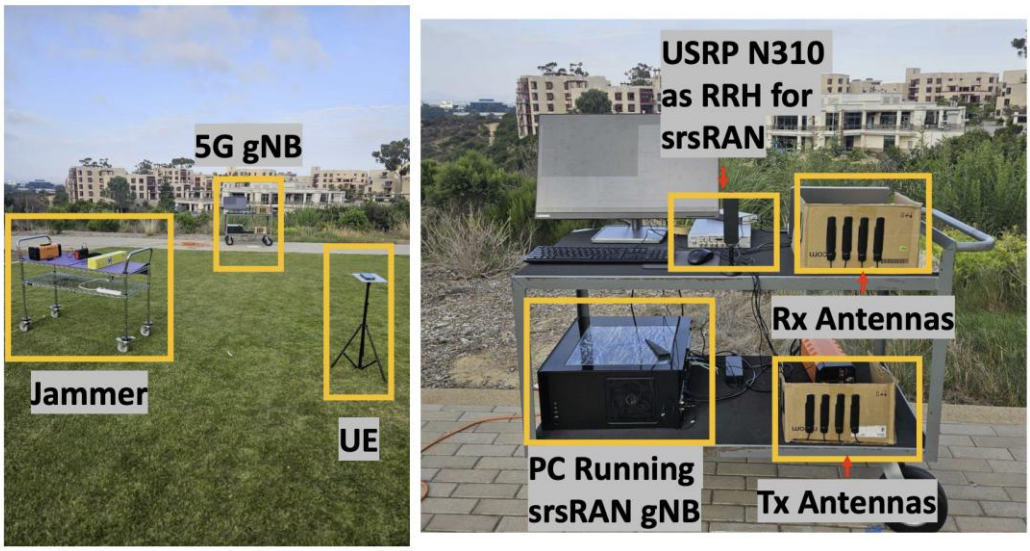

(a) Experiment Scenario (b) 5G gNB with 4 antenna MIMO Setup

Figure 2: Proposed Experiment Setup and Outdoor test scenarios

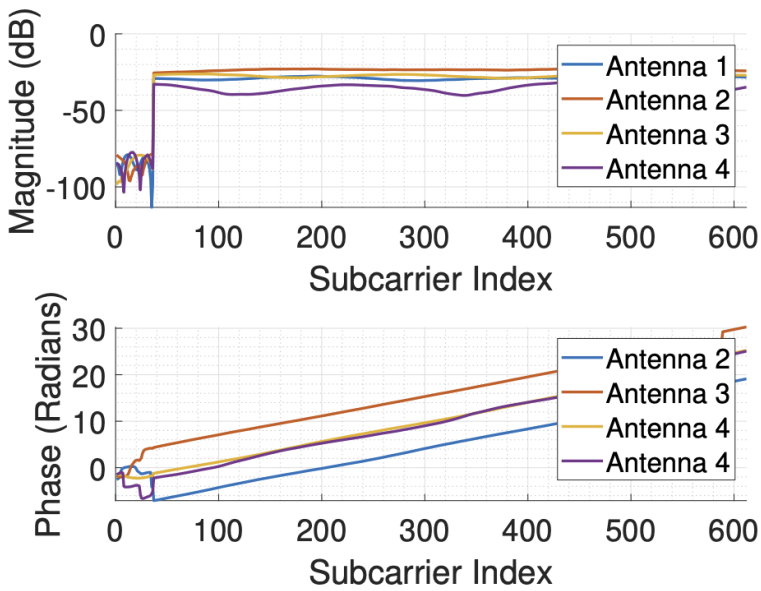

Figure 3: Initial 3D channel measurements through our platform across time, frequency, and space.

Deliverables

- **D1.1** Sub-6 AeroSense requirements and measurable targets, sensing accuracy, detection latency, false alarm targets, and comm impact bounds.
- **D1.2** Partner-facing API and integration spec, for O-RAN vendor and integrator adoption.

B. srsRAN integration and baseline end-to-end prototype (Month 2-4)

Objective: Prove the real-time pipeline and establish baselines before deeper algorithms.

- Implement reliable extraction and streaming of wideband channel tensors and PHY metadata from **DMRS and SRS** in srsRAN, as shown in Figure 3.
- Integrate the stream into MIMO-RIC, provide bounded buffers and health monitoring for long-running experiments.
- Implement baseline sensing and tracking, 2D MUSIC angle estimation and a simple tracker, to form repeatable baselines. Some Initial results are presented in Figure 4.
- Set up repeatable experiment scripts and logs so partner engineers can reproduce results.

Deliverables

- **D1.3** AeroSense telemetry prototype on srsRAN with stable streaming and configuration management.
- **D1.4** Baseline drone detection and tracking demo with repeatable scripts and recorded traces.

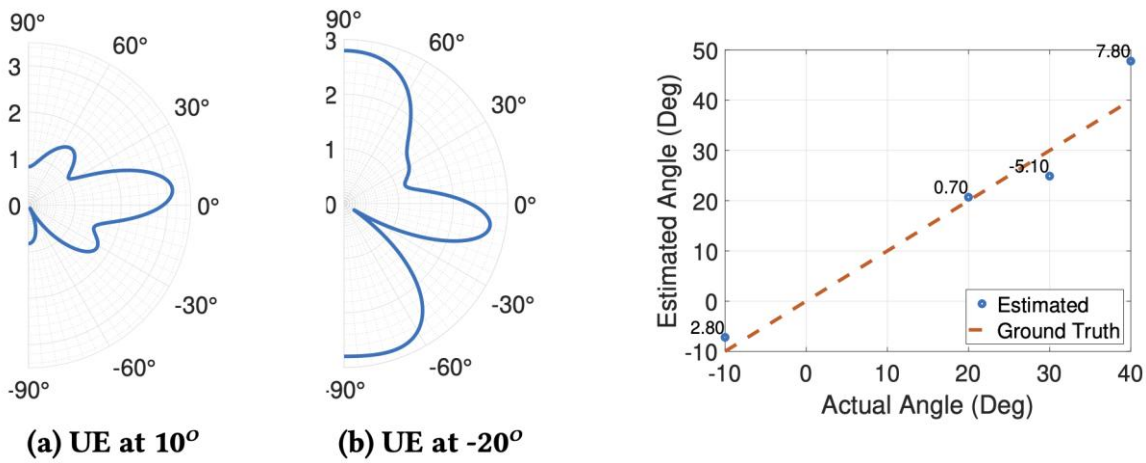

Figure 4: Initial AOA sensing results from our setup and measurement data is accurate to 2-3 degrees error.

C. RPI drone-facility experiments, dataset v0, and Phase 2 pilot plan (Month 4-6)

Objective: Validate AeroSense in realistic flight conditions and convert results into a pilot-ready Phase 2 plan.

- Run controlled flight experiments using **RPI's drone testing facility**, collect channel tensors synchronized with ground-truth trajectories using available tracking instrumentation and operational logs.
- Quantify baseline performance, detection range, tracking error, false alarms, and comm impact under realistic traffic.
- Identify gaps that Phase 2 will address, such as synchronization sensitivity, pilot sparsity, clutter, and multi-target confusion.
- Produce market positioning and IP plan aligned with **O-RAN vendor + integrator** business models, xApps plus SDK packaging.

Deliverables

- **D1.5** AeroSense Dataset v0 and evaluation report from RPI drone facility tests.
- **D1.6** Phase 2 workplan and pilot plan, target sites, success metrics, and integration checklist.
- **D1.7** Commercialization and IP plan, background vs foreground IP and release strategy, public dataset and code "as appropriate".

Phase 2, technical work packages and milestones

WP1. Productizable AeroSense SDK on top of MIMO-RIC for sub-6 (Jan 2027–Dec 2027)

- Harden telemetry and control SDK, multi-UE and multi-gNB support, security controls, and CI tests.
- Deliver calibration routines for multi-static sensing, time and CFO alignment with confidence scoring.

Milestone: Stable long-run operation and partner ingest of telemetry with documented

performance.

WP2. 5G-compliant ISAC co-design: sensing-comm tradeoff, beams, and resources (Jan 2027–Jun 2028)

- Scheduling and waveform strategy using **DMRS and SRS** under sub-6 TDD constraints, define sensing opportunity windows that adapt to load.
- Beamforming and resource policies to balance throughput vs sensing observability, including which UEs and BS pairs contribute most to sensing.
- Real-time implementation in xApps and evaluation on the srsRAN testbed.

Milestone: Demonstrated sensing-comm tradeoff curves and bounded service impact under AeroSense policies.

WP3. Drone detection, tracking, and classification for operational use (Jan 2027–Jun 2028)

- Robust multi-static tracking, extend MD-Track-style pipelines to fuse angle, Doppler, and confidence features across base stations.
- Classification model for **drone vs non-drone**, using trajectory priors and intrinsic RF features, include an “unknown object” state.
- Continuous dataset expansion and reproducible evaluation protocol based on RPI facility flights.

Milestone: Reliable detection and tracking with confidence-aware classification in cluttered environments.

WP4. Validation, partner integration, and pilot demonstrations (Jul 2028–Jun 2029)

- Port AeroSense APIs and reference xApps to the O-RAN vendor and integrator stack, maintain a compatibility layer beyond srsRAN.
- Execute pilot demonstrations, starting at **RPI drone facility** and extending to a representative partner site when available.
- Final packaging: integration guide, operational playbook, validation report, datasets and code release as appropriate.

Milestone: Pilot complete with repeatable deployment procedure and commercialization package.

Key risks and mitigations

- **Multi-static synchronization drift**, mitigated by explicit time and CFO estimation, periodic calibration, and confidence-based fallback modes.
- **Pilot availability under traffic**, mitigated by adaptive sensing windows and opportunistic use of DMRS plus scheduled SRS bursts.
- **Clutter and false alarms**, mitigated by multi-static fusion, conservative confidence thresholds, and an “unknown” class.
- **Runtime constraints**, mitigated by feature compression at the edge, bounded buffers, and lightweight inference.

4. R&R (Roles and Responsibilities)

Expected R&R of Research Institute	**RPI will provide the core R&D and validation for AeroSense (built on MIMO-RIC):** • Extend MIMO-RIC telemetry extraction to expose 5G uplink sensing primitives from SRS and DMRS and define portable APIs. • Develop bi-static and multi-static sensing, detection, and tracking algorithms, including 2D MUSIC and MD-Track, and quantify sensing-communication tradeoffs. • Design beamforming and resource allocation policies that improve drone observability while preserving user QoS. • Design and operate an over-the-air srsRAN-based testbed, perform experiments, and deliver evaluation reports. • Curate datasets, release code and data as appropriate, and provide integration documentation and developer support.
Expected R&R of Korean SME Partner	**Korean SME partner (O-RAN vendor and/or private 5G integrator) will focus on integration and commercialization:** • Provide target deployment requirements, product constraints, and acceptance criteria for airspace security use cases. • Integrate AeroSense APIs and at least two reference xApps into their O-RAN stack or private 5G solution, including dashboards and alerting. • Harden software for product release: packaging, CI/CD, security review, and operational tooling. • Lead pilot planning and field validation at customer-like sites and provide feedback to refine requirements. • Drive go-to-market planning, ecosystem partnerships and standard alignment.

5. Expected Outcomes/Impact

Expected Outcomes and Impact	**Technical outcomes** • AeroSense prototype, a 5G-compliant bi-static and multi-static sensing system for drone detection, tracking, and classification, implemented on srsRAN and built on the MIMO-RIC telemetry and control platform. • Demonstrated algorithms for high-resolution angle and motion estimation (2D MUSIC, MD-Track), plus sensing-communication co-design policies for beams and resource allocation. • Documented APIs, containerized reference implementation, and curated datasets enabling rapid integration and xApp development by O-RAN vendors and private 5G integrators. **Commercialization potential** • Differentiating add-on software for O-RAN stacks and private 5G deployments, enabling premium airspace-security features without additional radar hardware. • Low maintenance cost by leveraging existing cellular infrastructure for sensing. • Clear path to licensing, and productization, including pilot deployments, reference dashboards, and integration guides. **Broader impact** • Strengthens Korea's Open-RAN ecosystem with a validated reference approach for standard-compliant ISAC. • Safety and security for critical sites by enabling early detection and tracking of unauthorized aerial objects.

6. References

[1] Mamaghani A, Ghosh U, **Jain IK**, Shakkottai S, Bharadia D. **Tiny-Twin: A CPU-Native Full-stack Digital Twin for NextG Cellular Network**s. arXiv preprint arXiv:2601.08217. 2026 Jan 13.

[2] Jonnavithula SS, **Jain IK**, Bharadia D. **MIMO-RIC: RAN Intelligent Controller for MIMO xApps**. In Proceedings of the 30th Annual International Conference on Mobile Computing and Networking 2024 Dec 4 (pp. 2315-2322).

[3] **Jain IK**, Mm S, Bharadia D. **Commrad: Context-aware sensing-driven millimeter-wave networks**. In Proceedings of the 22nd ACM Conference on Embedded Networked Sensor Systems 2024 Nov 4 (pp. 633-646).

[4] Zumegen FJ, **Jain IK**, Bharadia D. **Beamarmor: Seamless anti-jamming in 5G cellular networks with MIMO null-steering.** InProceedings of the 25th International Workshop on Mobile Computing Systems and Applications 2024 Feb 28 (pp. 121-126).

[5] Ayyalasomayajula R, Arun A, Wu C, Rajagopalan S, Ganesaraman S, Seetharaman A, **Jain IK**, Bharadia D. **LocAP: Autonomous millimeter accurate mapping of {WiFi} infrastructure.** In17th USENIX Symposium on Networked Systems Design and Implementation (NSDI 20) 2020 (pp. 1115-1129).

[6] Xie Y, Xiong J, Li M, Jamieson K. **mD-Track: Leveraging multi-dimensionality for passive indoor Wi-Fi tracking**. In The 25th Annual International Conference on Mobile Computing and Networking 2019 Aug 5 (pp. 1-16).

[7] Ayyalasomayajula R, Arun A, Wu C, Sharma S, Sethi AR, Vasisht D, Bharadia D. **Deep learning based wireless localization for indoor navigation**. In Proceedings of the 26th Annual International Conference on Mobile Computing and Networking 2020 Apr 16 (pp. 1-14).

Patents

[8] Ayyalasomayajula SR, Bharadia D, Ganesaraman S, **Jain IK**, Rajagopalan S, Seetharaman A, Sharma S, Arun A, Wu C, inventors; University of California San Diego UCSD, assignee. **Wireless device localization**. United States patent US 12,282,111. 2025 Apr 22.

[9] Yang Y, Paranjape N, Muthunoori D, **Jain IK,** inventors; VMware LLC, assignee. **RAN applications for inter-cell interference mitigation for massive MIMO in a RAN**. United States patent US 12,457,594. 2025 Oct 28.

☐ Terms:

1) Industrial Technology Classification

· Classification system according to Industrial Technology Classification Table (**Appendix 1**, based on Article 16 of the Common Operational Guidelines for the Industrial Technology Innovation Project in Korea).

2) Technology Readiness Level (TRL)

Description		
·A consistent and objective indicator of the technological maturity of key element technologies		
	Basic Research Stage (1-2)	1st Stage: Basic theories and experiments 2nd Stage: Proof of Concept, such as practical ideas or patents
	Experimental Stage (3-4)	3rd Stage: Verification of basic performance at a laboratory scale 4th Stage: Evaluation of key performance of materials, components, and systems at a laboratory scale
	Prototype Stage (5-6)	5th Stage: Production and performance evaluation of prototypes of finalized materials, components, and systems 6th Stage: Production and performance evaluation of prototypes at a pilot scale
	Productization Stage (7-8)	7th Stage: Reliability testing and evaluation by potential customers 8th Stage: Prototype certification and standardization
	Commercialization Stage (9)	9th Stage: Commercialization